Схема радиотелефона PANASONIC KX-TC419-BX

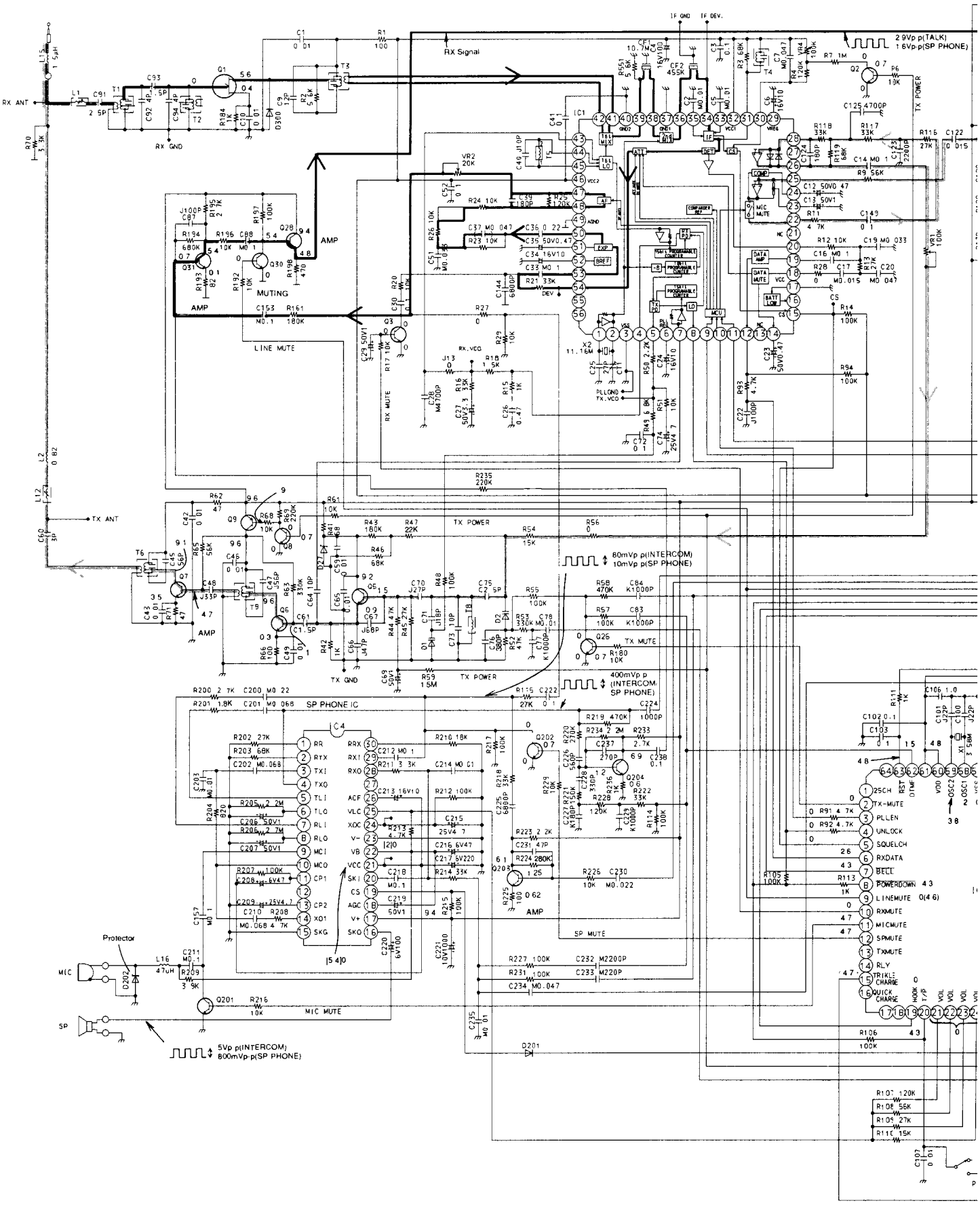

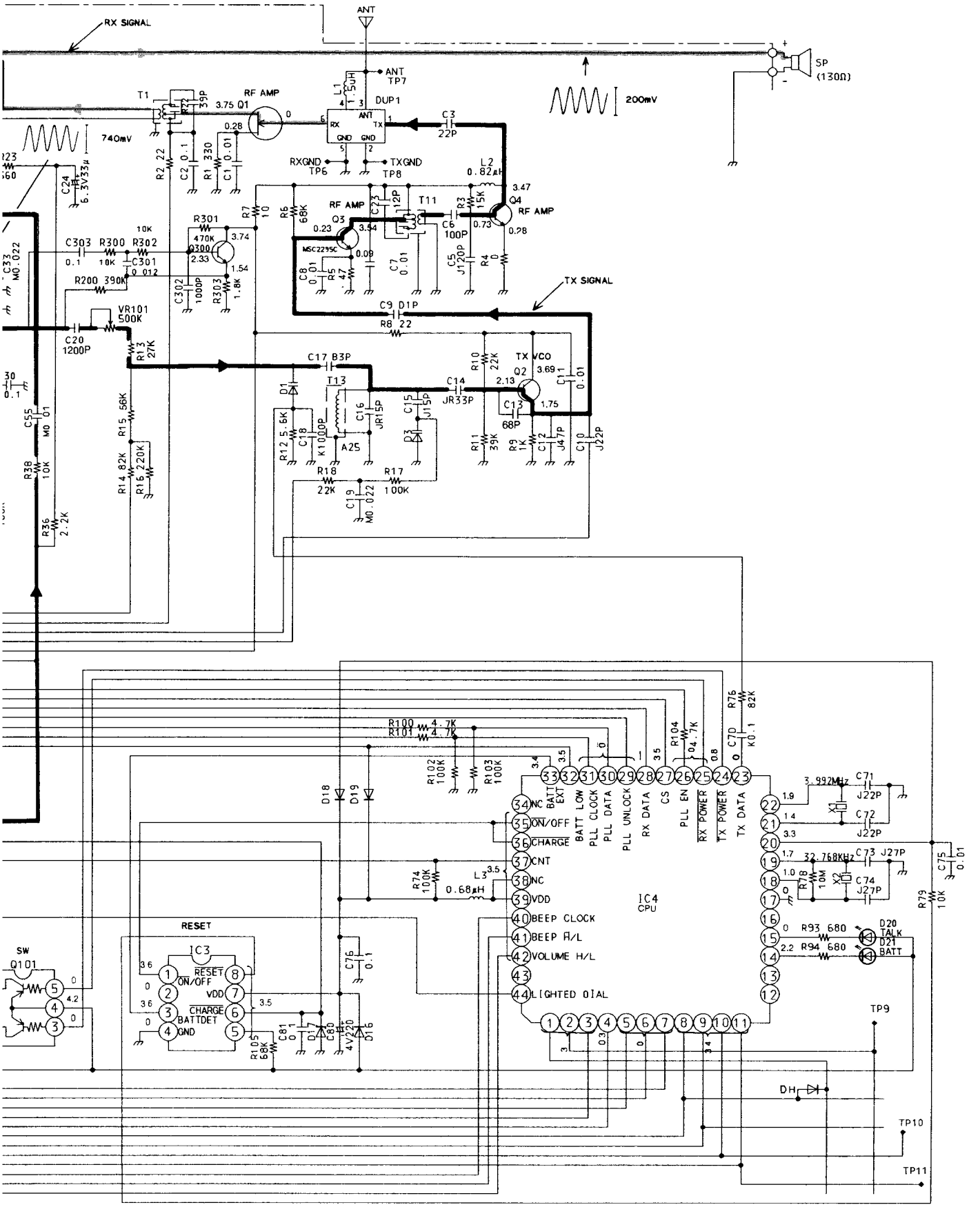
RX SIGNAL
ANT
ANT TP7
SP (130Ω)
200mV
740mV
T1
RF AMP
Q1
DUP1
L1 50H
C3 22P
RXGND TP6
TXGND TP8
L2 0.82μH
Q4
RF AMP
T11
C6 100P
Q3
MSC2295C
R301 470K
Q300
R302 10K
C303 0.1
R300 10K
C301 0.012
R200 390K
VR101 500K
C20 1200P
R13 27K
C302 1000P
R303 1.8K
C24 6.3V33μ
R2 22
C2 0.1
R1 330
C1 0.01
R7 10
R6 68K
C23 12P
R3 15K
C5 J120P
R4 0
C8 0.01
R5 47
C7 0.01
TX SIGNAL
C9 D1P
R8 22
C17 B3P
T13
C16 JR15P
C15 J15P
D1
R12 5.6K
C18 K1000P
A25
D3
C14 JR33P
TX VCO
Q2
C13 68P
R10 22K
C11 0.01
R11 39K
R9 1K
C12 J47P
C10 J22P
R18 22K
R17 100K
C19 M0.022
C55 M0.01
R38 10K
R36 2.2K
R15 56K
R14 82K
R16 220K
R100 4.7K
R101 4.7K
R102 100K
R103 100K
R104 4.7K
R76 82K
C70 K0.1
D18
D19
R74 100K
L3 0.68μH
IC4
CPU
NC
ON/OFF
CHARGE
CNT
NC
VDD
BEEP CLOCK
BEEP H/L
VOLUME H/L
LIGHTED DIAL
BATT EXT
BATT LOW
PLL CLOCK
PLL DATA
PLL UNLOCK
RX DATA
CS
PLL EN
RX POWER
TX POWER
TX DATA
3.992MHz
X1
C71 J22P
C72 J22P
32.768KHz
X2
C73 J27P
C74 J27P
R78 10M
C75 0.01
R79 10K
R93 680
R94 680
D20 TALK
D21 BATT
RESET
IC3
RESET
ON/OFF
VDD
CHARGE
BATTDET
GND
SW
Q101
C76 0.1
R105 68K
C81 0.1
D17
C80 4V220
D16
TP9
DH
TP10
TP11

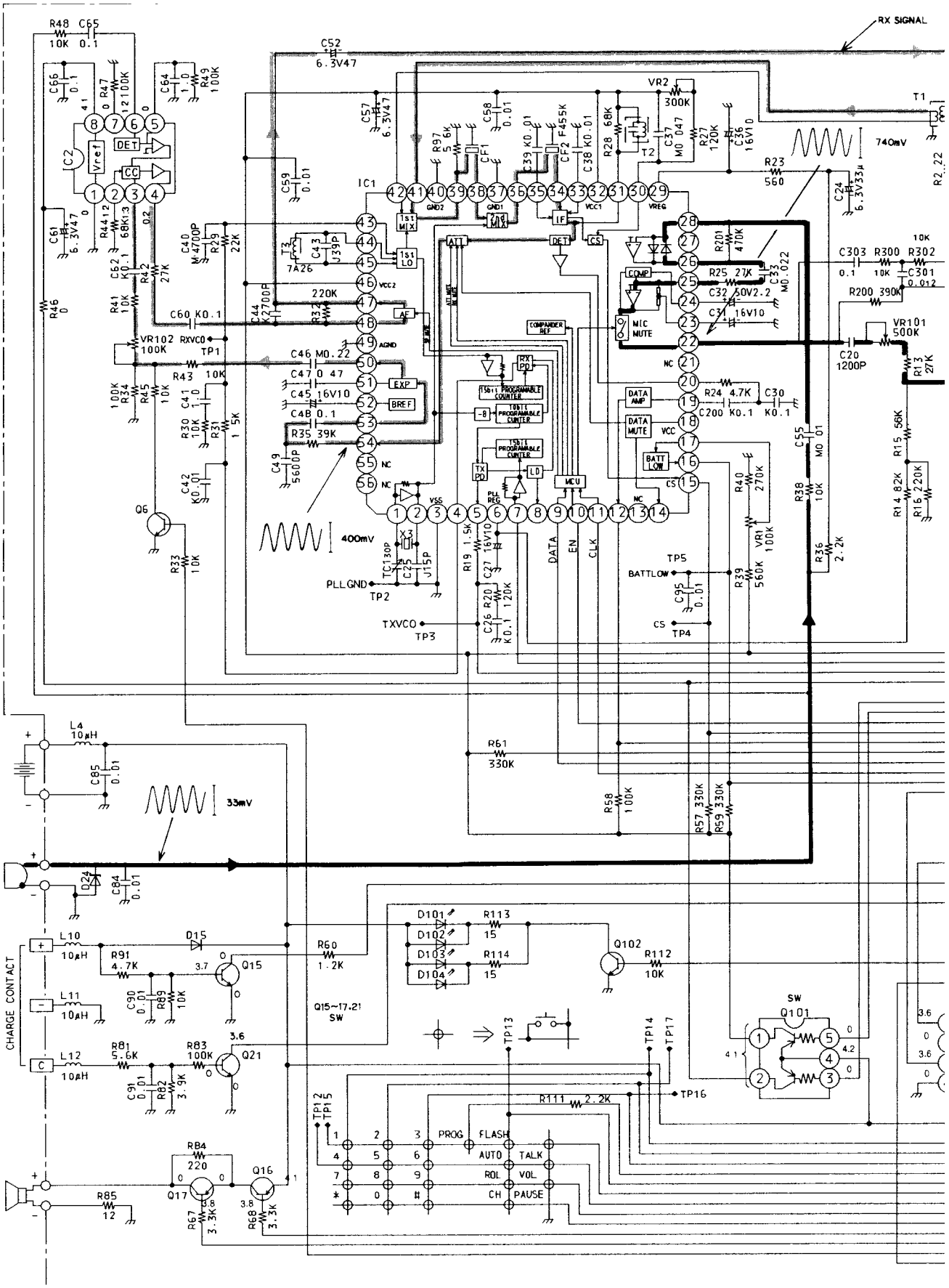
RX SIGNAL
IC1
IC2
T1
T2
T3
VR2
300K
740mV
400mV
33mV
R23
560
R48
10K
C65
0.1
C52
6.3V47
C57
6.3V47
C58
0.01
C59
0.01
C66
0.1
C64
1
R49
100K
R47
100K
C61
6.3V47
R46
0
R41
10K
R42
27K
C62
K0.1
R44
68K
C40
4700P
R29
22K
C60
K0.1
VR102
100K
RXVCO
TP1
R43
10K
R34
100K
R45
10K
C41
1.0
R30
10K
R31
1.5K
C42
K0.01
Q6
R33
10K
C46
M0.22
C47
0.47
C45
16V10
C48
0.1
R35
39K
C49
5600P
C44
2700P
R32
220K
C43
1.39P
7A26
C24
6.3V33μ
R2..22
C303
0.1
R300
10K
R302
10K
C301
0.012
R200
390K
VR101
500K
C20
1200P
R13
27K
R15
56K
R14
82K
R16
220K
C55
M0.01
R38
10K
R36
2.2K
R40
270K
VR1
100K
R39
560K
C95
0.01
TP5
BATTLOW
CS
TP4
R24
4.7K
C30
C200
K0.1
K0.1
R25
27K
C32
50V2.2
C31
16V10
C33
M0.022
R201
470K
C36
16V10
C37
M0.047
R27
120K
R28
68K
C38
K0.01
CF2
F455K
C39
K0.01
CF1
R97
5.6K
DATA
EN
CLK
R19
1.5K
C27
16V10
R20
120K
C26
K0.1
TXVCO
TP3
PLLGND
TP2
X3
TC130P
C25
U15P
R61
330K
R58
100K
R57
330K
R59
330K
L4
10μH
C85
0.01
D24
C84
0.01
CHARGE CONTACT
L10
10μH
L11
10μH
L12
10μH
R91
4.7K
D15
Q15
C90
0.01
R89
10K
R81
5.6K
R83
100K
Q21
C91
0.01
R82
3.9K
R60
1.2K
Q15~17.21
SW
D101
D102
D103
D104
R113
15
R114
15
Q102
R112
10K
SW
Q101
TP13
TP14
TP17
TP16
R111
2.2K
TP12
TP15
PROG
FLASH
AUTO
TALK
ROL
VOL
CH
PAUSE
RB4
220
Q16
Q17
R85
12
R67
3.3K
R68
3.3K

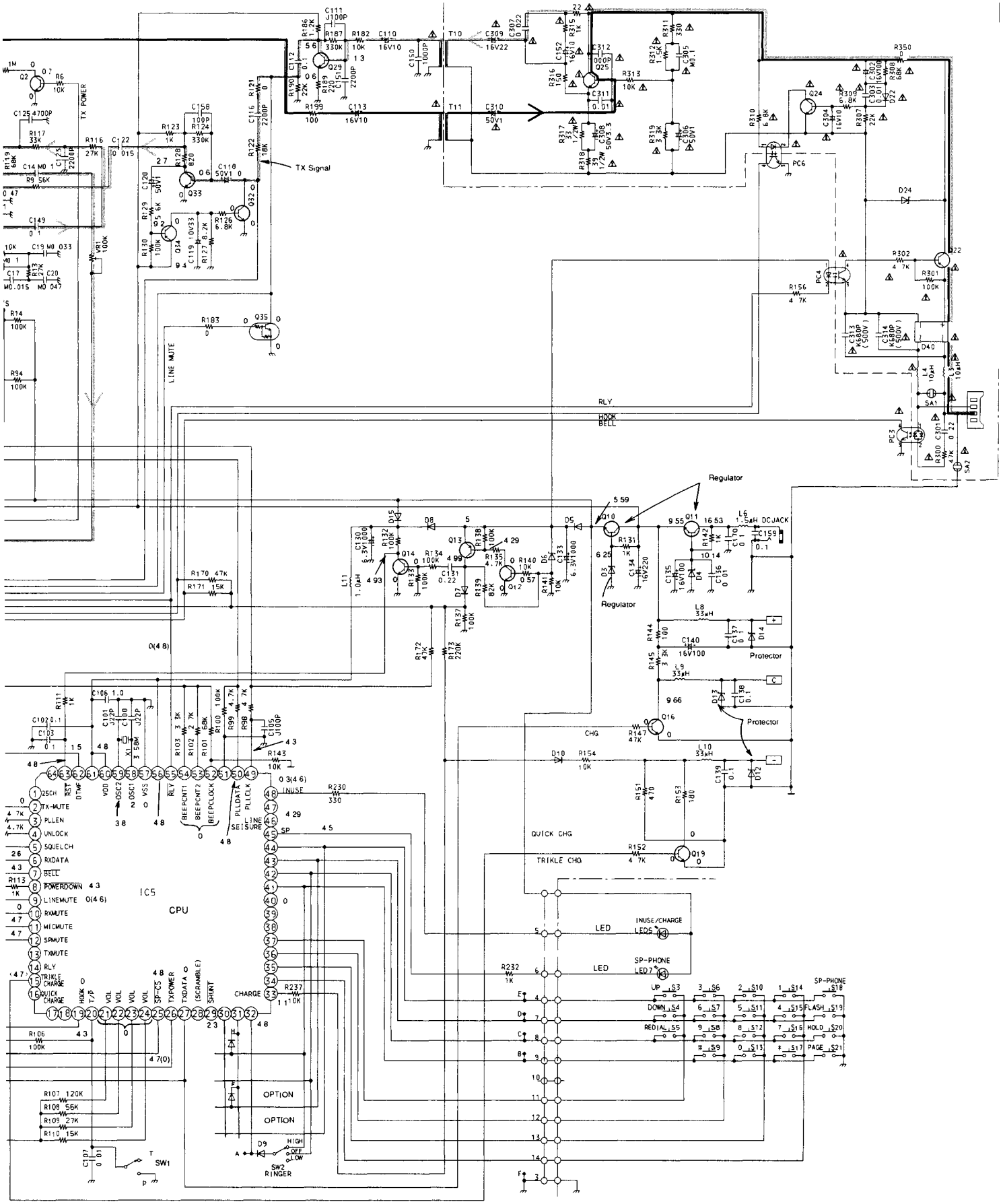
TX POWER
TX Signal
LINE MUTE
RLY
HOOK
BELL
Regulator
Protector
DCJACK
IC5
CPU
25CH
TX-MUTE
PLLEN
UNLOCK
SQUELCH
RXDATA
BELL
POWERDOWN
LINEMUTE
RXMUTE
MICMUTE
SPMUTE
TXMUTE
RLY
TRIKLE CHARGE
QUICK CHARGE
CHG
QUICK CHG
TRIKLE CHG
INUSE
SP
LINE SEIZURE
CHARGE
LED
INUSE/CHARGE
SP-PHONE
UP S3
DOWN S4
REDIAL S5
FLASH S19
HOLD S20
PAGE S21
OPTION
OPTION
SW1
SW2
RINGER
HIGH
OFF
LOW