Схема радиотелефона PANASONIC KX-TC910-B

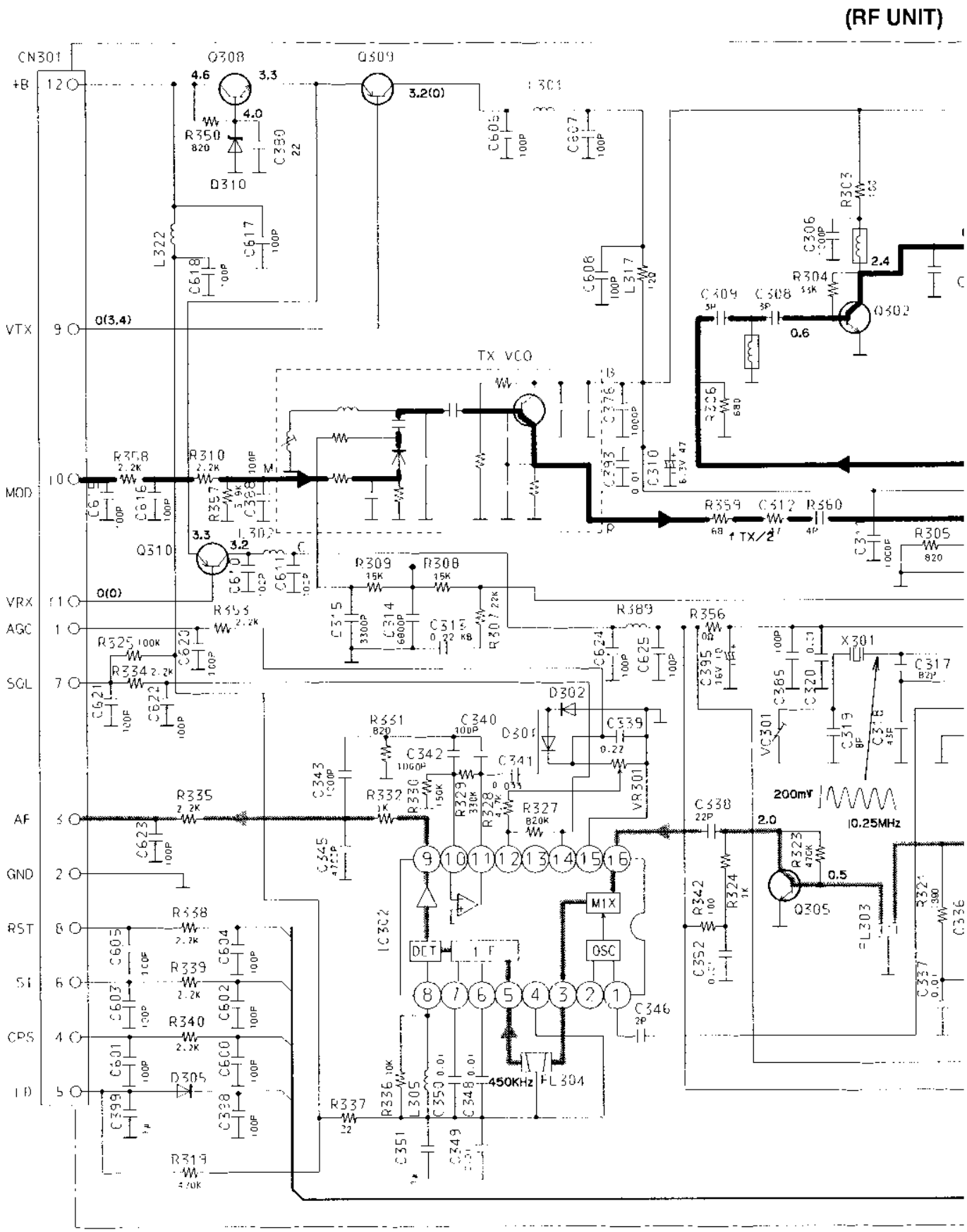

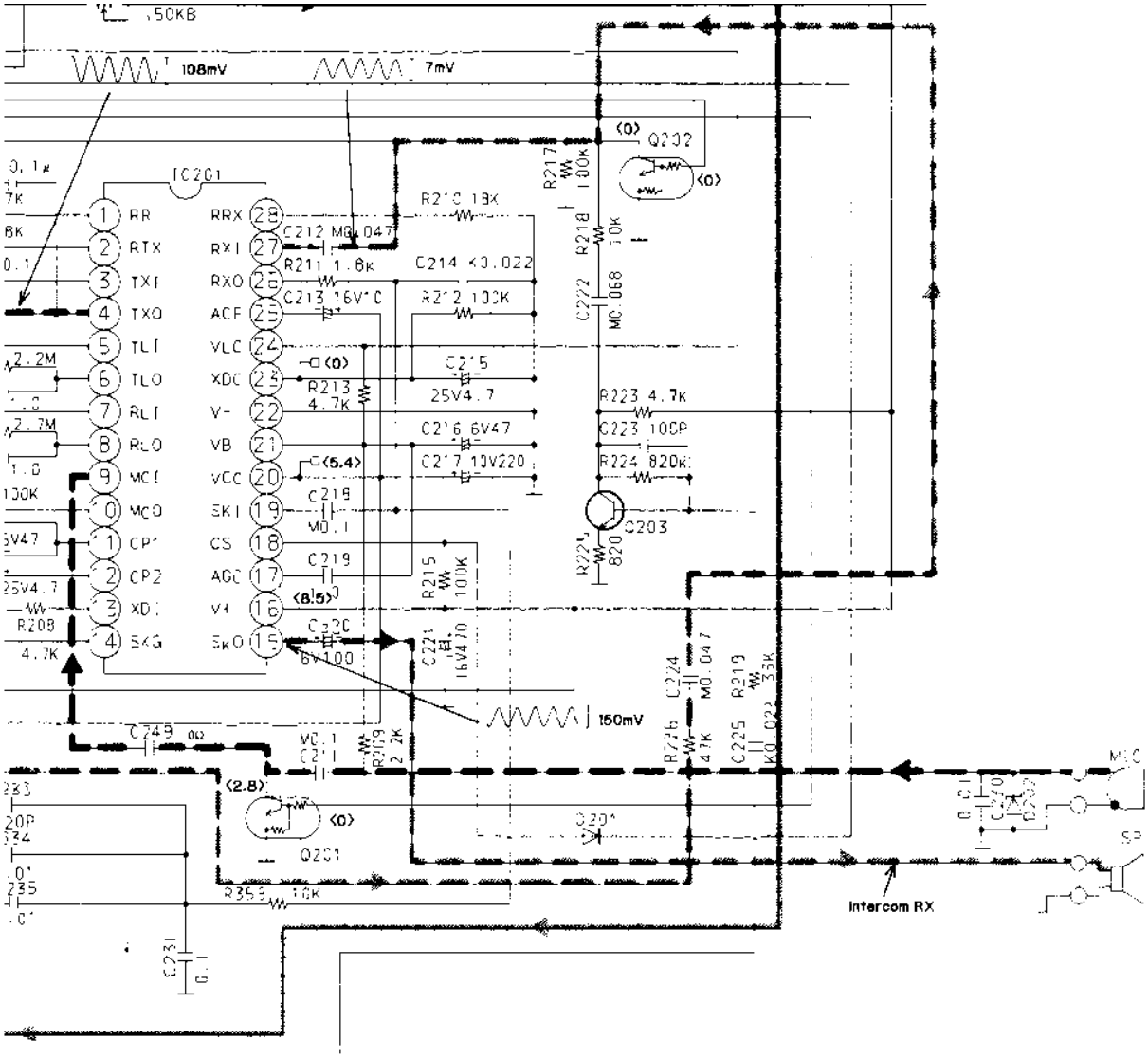
IC201
RR
RTX
TXI
TXO
TLI
TLO
RLI
RLO
MCI
MCO
CP1
CP2
XDI
SKG
RRX
RXI
RXO
ACF
VLC
XDC
V-
VB
VCC
SKI
CS
AGC
V+
SKO
108mV
7mV
150mV
Q202
Q203
Q201
R217 180K
R218 10K
C222 MC.068
R223 4.7K
C223 100P
R224 820K
R221 820
C203
C212 MC.047
R211 1.8K
C214 K0.022
C213 16V10
R212 100K
C215 25V4.7
R213 4.7K
C216 6V47
C217 10V220
C218 MC.1
C219
C220 6V100
R215 100K
C221 16V470
R209 2.2K
C224 MC.047
R219 33K
R226 47K
C225 K0.022
C249 0Ω
R208 4.7K
R359 10K
C231 0.1
MIC
SP
Intercom RX

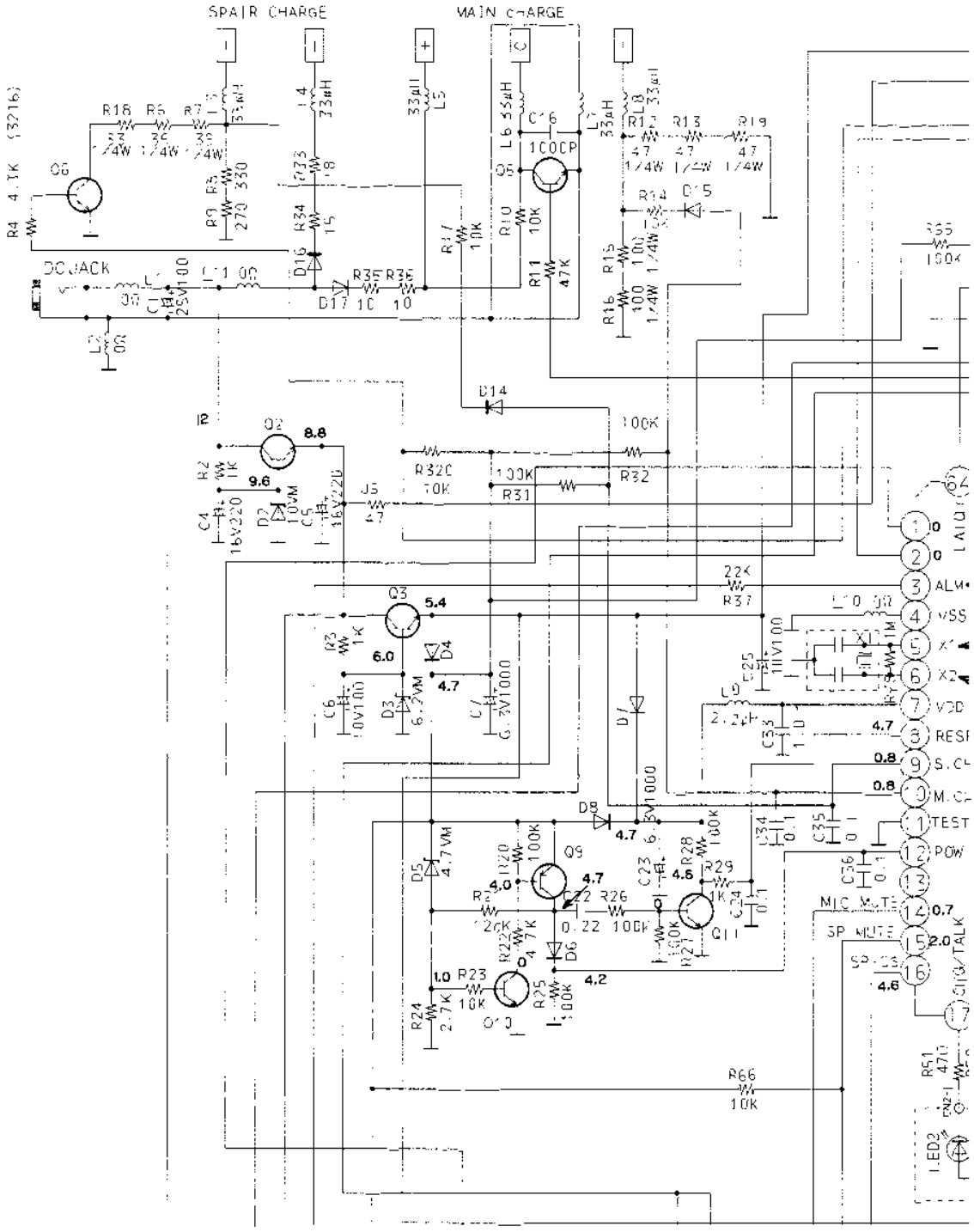
SPAIR CHARGE
MAIN CHARGE
DC JACK
ALM
VSS
VDD
RESET
S.CL
M.CL
TEST
POW
MIC MUTE
SP MUTE
SIG/TALK
LED2

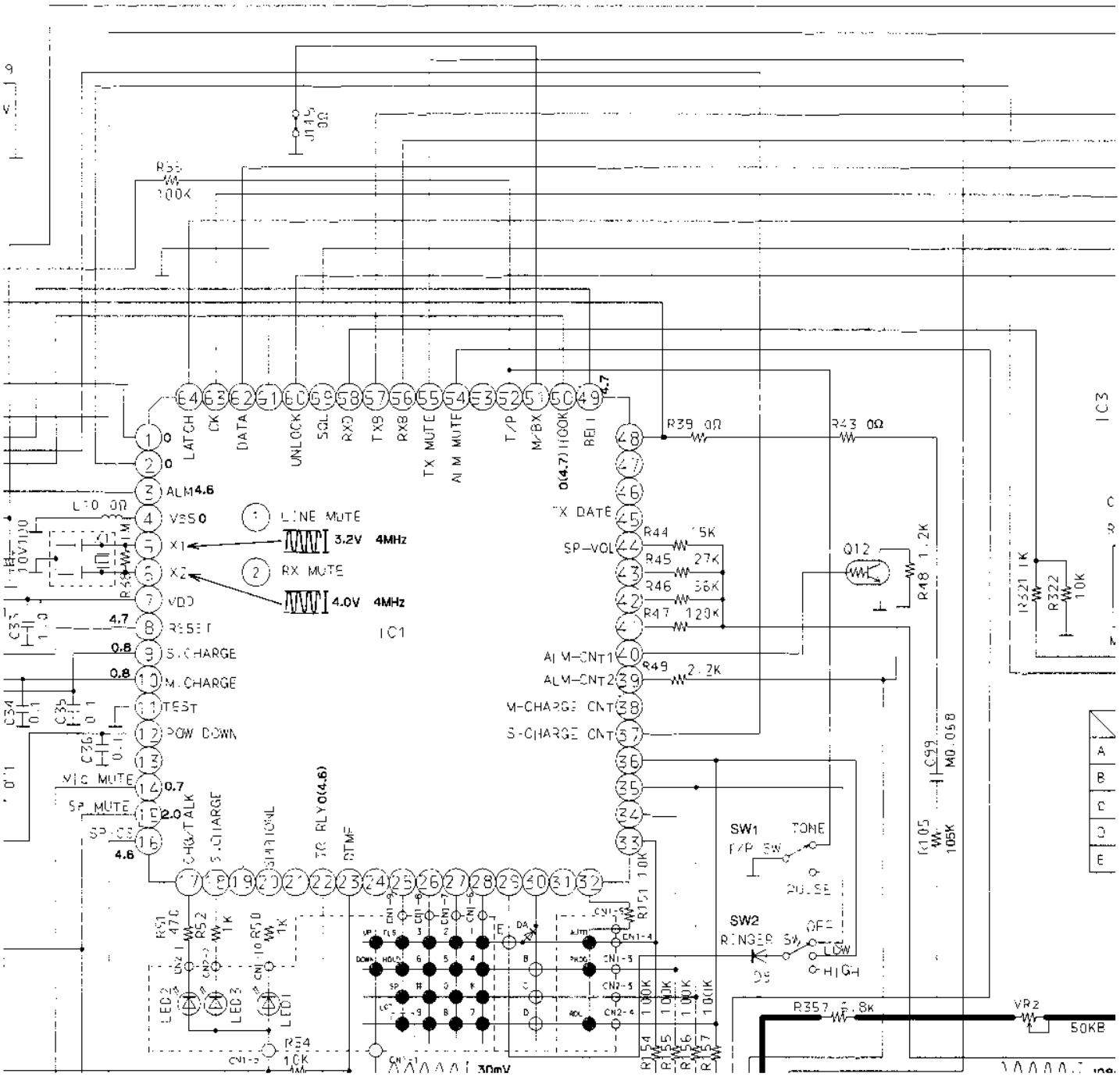
LATCH
CK
DATA
UNLOCK
SQL
RXD
TXD
RXD
TX MUTE
ALM MUTE
T/P
M/BX
REI
ALM
VSS
X1
X2
VDD
RESET
S.CHARGE
M.CHARGE
TEST
POW DOWN
MIC MUTE
SP MUTE
SP-VOL
TX DATE
ALM-CNT1
ALM-CNT2
M-CHARGE CNT
S-CHARGE CNT
CHG/TALK
S.CHARGE
TR RLY
DTMF
LINE MUTE
3.2V
4MHz
RX MUTE
4.0V
4MHz
IC1
IC3
R39 0Ω
R43 0Ω
R44 15K
R45 27K
R46 56K
R47 120K
R49 2.2K
Q12
R48 1.2K
R321 1K
R322 10K
SW1
TONE
T/P SW
PULSE
SW2
RINGER SW
OFF
LOW
HIGH
R357 1.8K
VR2
50KB
R54 100K
R55 100K
R56 100K
R57 100K
R151 10K
R51 470
R52 1K
R50 1K
LED2
LED3
LED1
R54 10K
30mV

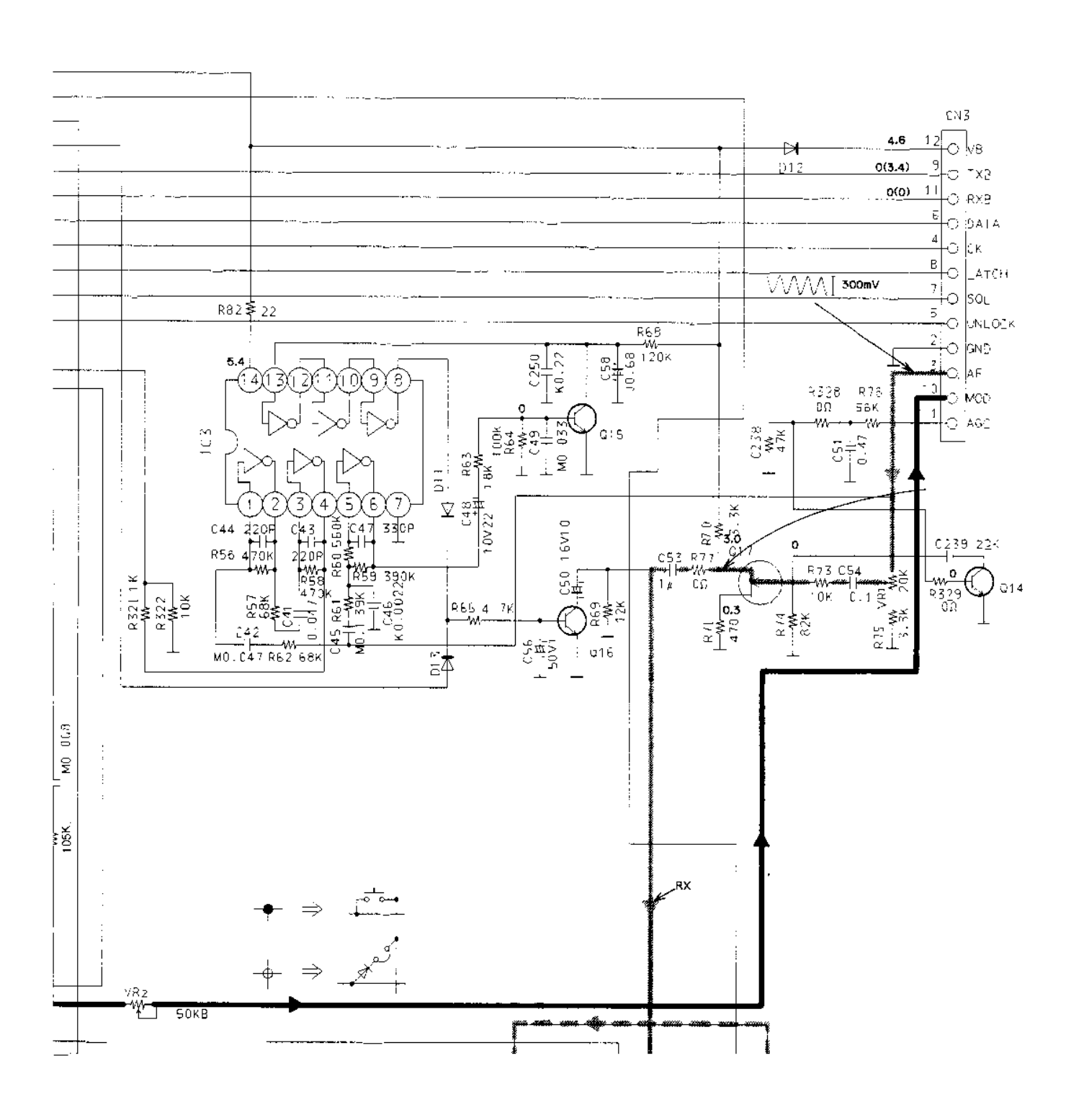
CN3
VB
TX2
RX2
DATA
CK
LATCH
SQL
UNLOCK
GND
AF
MOD
AGC
4.6
0(3.4)
0(0)
300mV
D12
R82 22
R68 120K
C250 K0.22
C58 J0.68
Q15
M0 033
R63 100K
R64 18K
C49
D11
C48 10V22
IC3
5.4
C44 220P
C43 220P
C47 330P
R56 470K
R60 560K
R58 470K
R59 390K
R57 68K
C41 0.01
C42
M0.047 R62 68K
C45 R61 39K
M0.1
C46 K0.00222
R321 1K
R322 10K
R66 4.7K
C50 16V10
R69 12K
C56 50V1
Q16
D13
C53 1μ
R77 0Ω
R70 3.3K
C17
R71 470
R74 82K
R73 10K
C54 0.1
VR1 20K
R75 3.3K
R328 0Ω
R76 56K
C238 47K
C51 0.47
C239 22K
R329 0Ω
Q14
RX
VR2
50KB
105K
M0 003

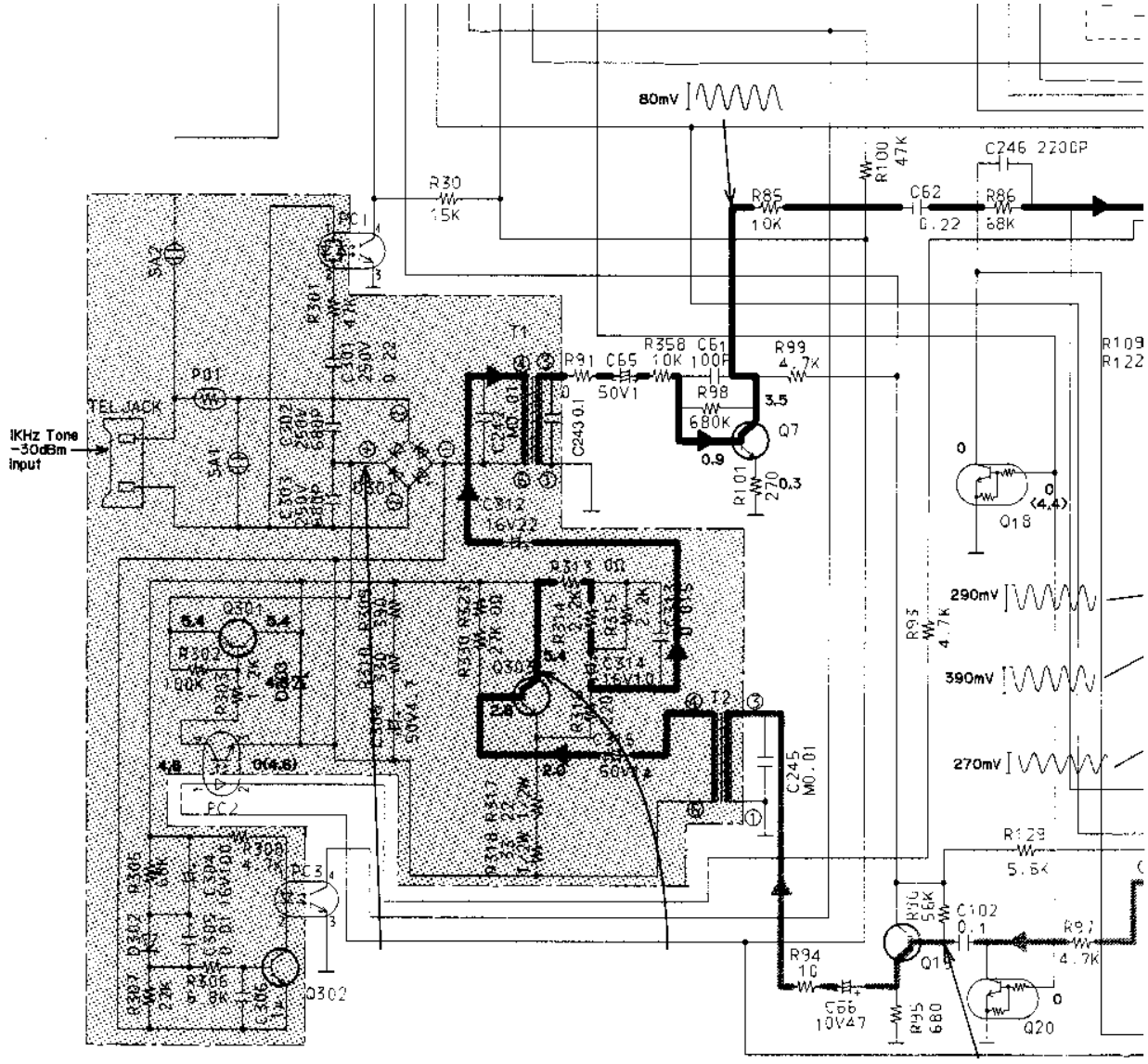
80mV
R30
15K
R85
10K
R100
47K
C62
0.22
C246 220CP
R86
68K
R109
R122
PC1
SA2
R301
C301
250V
0.22
T1
R91
C65
50V1
R358
10K
C61
100P
R99
4.7K
R98
680K
Q7
3.5
0.9
0.3
R101
270
C243 0.1
C244
M0.01
C312
16V22
TEL JACK
1KHz Tone
-30dBm
input
SA1
P01
C302
250V
6800
C303
250V
6800
R313 0Ω
R314
2.2K
R315
2.2K
C314
16V10
Q301
5.4
R302
100K
R303
1.2K
D303
4.8
0(4.8)
PC2
R330 R323
2.7K 0Ω
Q303
2.8
R312
330
R309
330
50V4.7
R318 R317
33 22
1.2K 1.2K
T2
C245
M0.01
R306
68K
R308
4.7K
PC3
C304
0.01
16V10
R302
R307
2.2K
R305
6.8K
C305
Q302
Q18
0
(4.4)
290mV
390mV
270mV
R93
4.7K
R129
5.6K
R96
56K
C102
0.1
R97
4.7K
Q19
R94
10
C66
10V47
R95
680
Q20

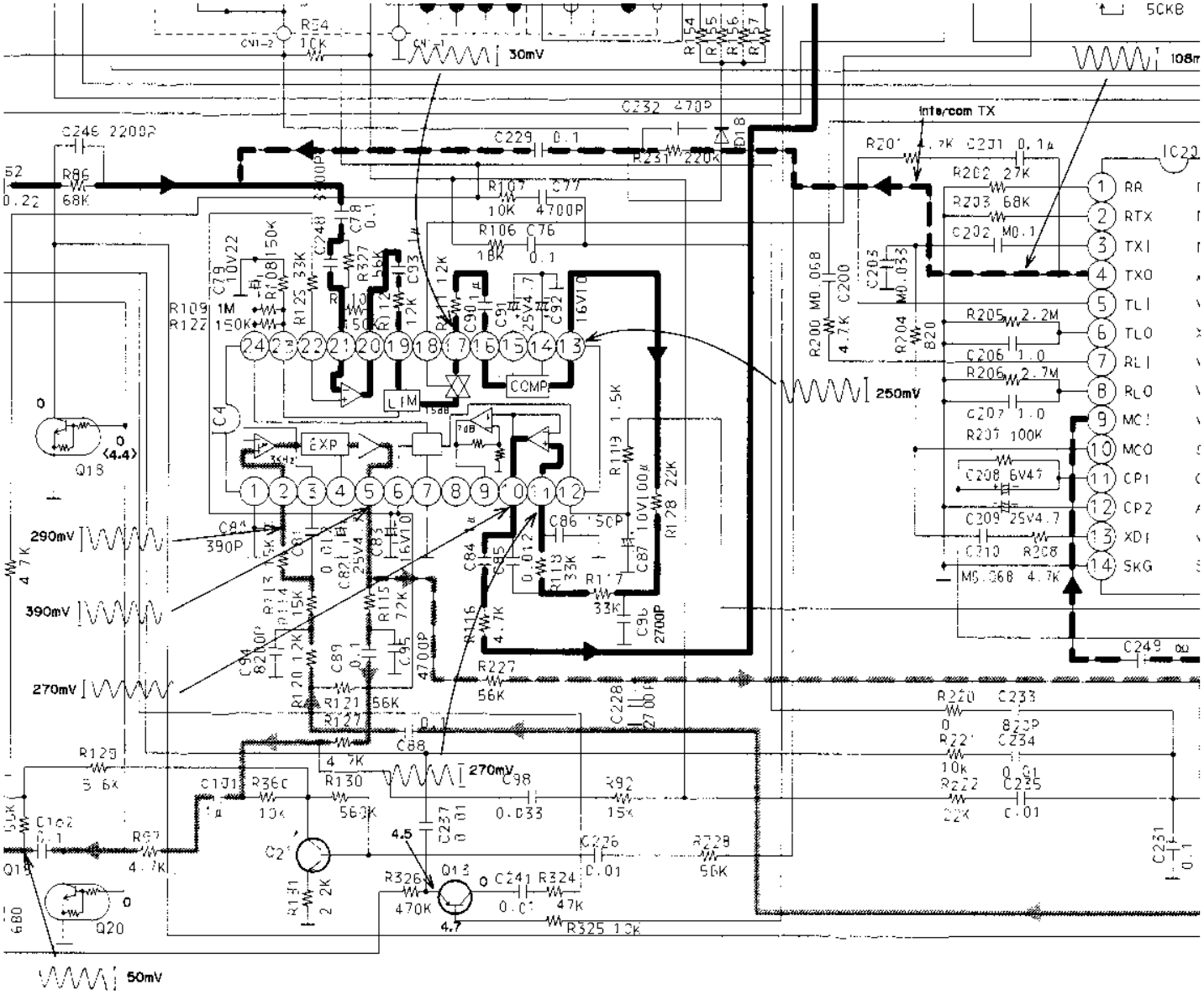
intercom TX
COMP
LIM
EXP
RR
RTX
TXI
TXO
TLI
TLO
RLI
RLO
MCI
MCO
CPI
CPO
XDI
SKG
30mV
250mV
290mV
390mV
270mV
50mV
Q18
Q20

)

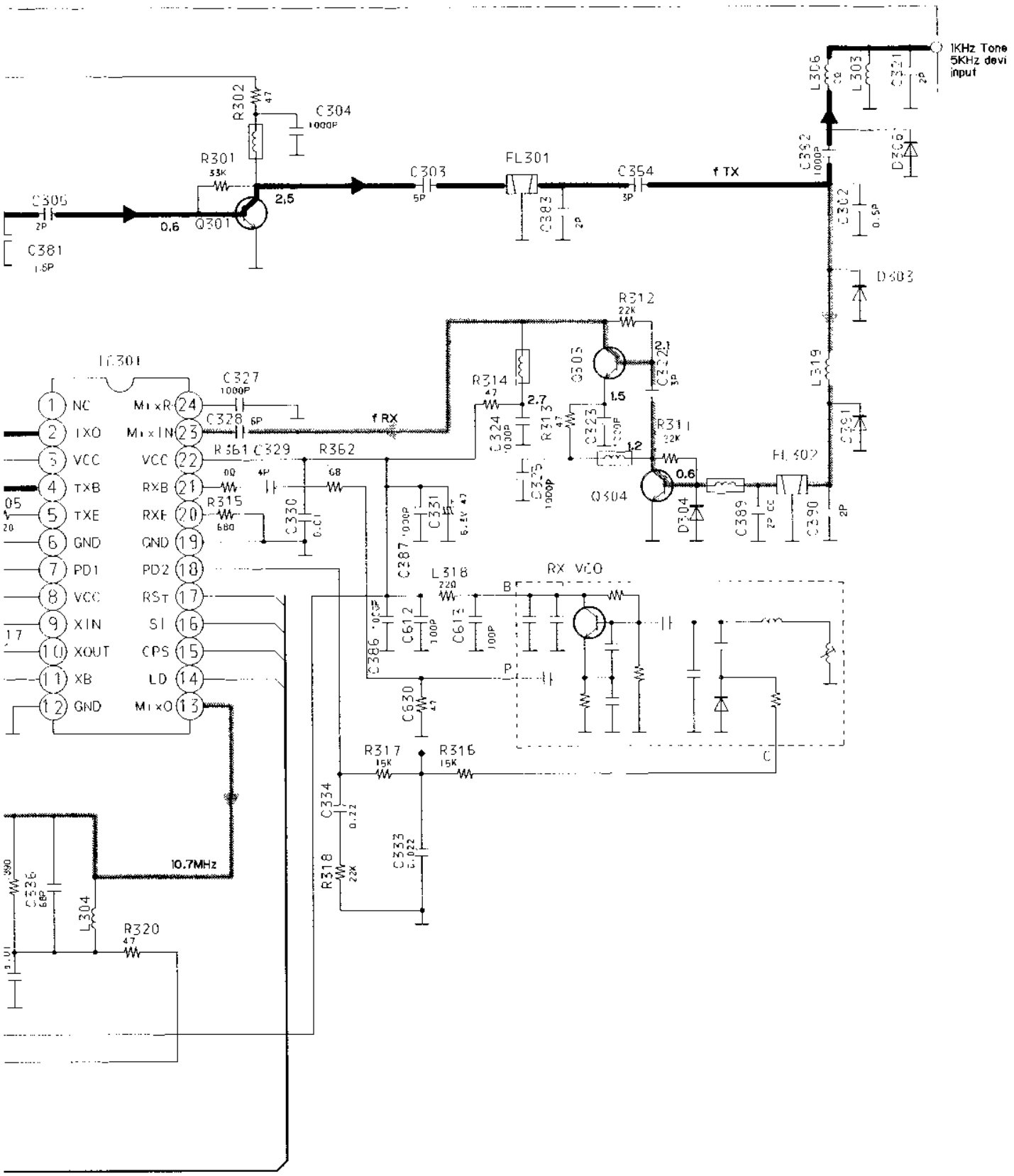
1KHz Tone
5KHz devi
input
R302
47
C304
1000P
R301
33K
C306
2P
C381
1.5P
0.6
Q301
2.5
C303
5P
FL301
C383
2P
C354
3P
f TX
C362
1000P
L306
L303
C321
2P
D305
C302
0.5P
D303
R312
22K
Q305
2.1
1.5
IC301
C327
1000P
C328
6P
f RX
R314
47
2.7
C324
1000P
R313
47
C323
R311
22K
1.2
0.6
Q304
L319
C391
FL302
D304
C389
2P
C390
2P
NC
TXO
VCC
TXB
TXE
GND
PD1
VCC
XIN
XOUT
XB
GND
MIXR
MIXIN
VCC
RXB
RXE
GND
PD2
RST
SI
CPS
LD
MIXO
R361
C329
R362
68
R315
680
C330
0.01
C331
C287
1000P
L318
220
RX VCO
B
C612
100P
C613
100P
C386
C630
47
P
C
R317
15K
R316
15K
C334
0.22
C333
0.022
R318
22K
10.7MHz
C336
68P
L304
R320
47

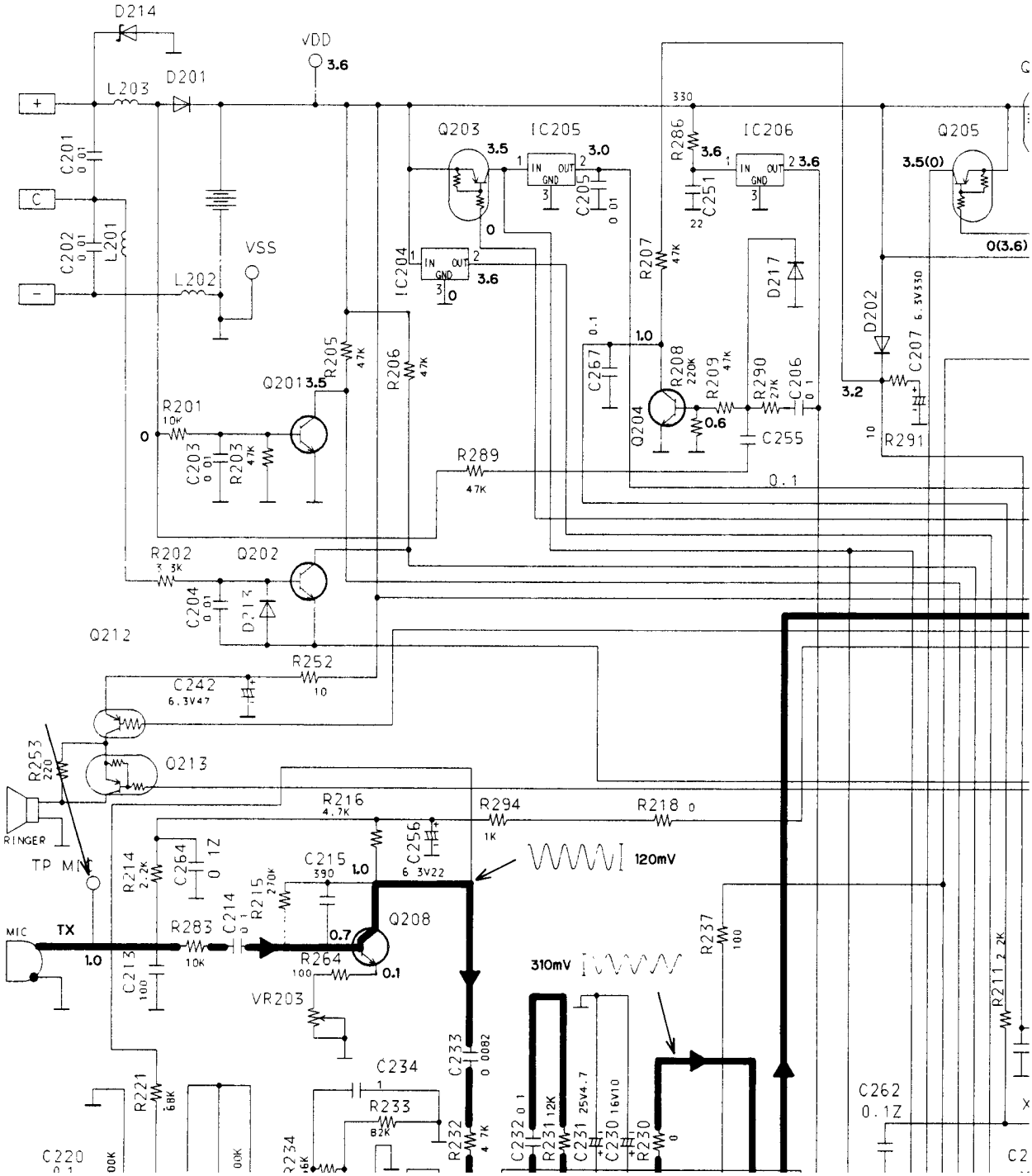
D214
VDD
3.6
D201
L203
C201
C202
L201
L202
VSS
Q203
IC205
IC206
Q205
IC204
R286
C251
C205
R207
D217
D202
C207
R291
Q201
R205
R206
R201
C203
R203
R289
C267
R208
R209
R290
C206
Q204
C255
R202
Q202
C204
D212
Q212
R252
C242
Q213
R253
RINGER
TP MIC
R216
R294
R218
C256
C264
R214
C215
R215
C214
R283
Q208
MIC
TX
C213
R264
VR203
120mV
310mV
R237
R211
C233
C234
R221
R233
R232
C232
R231
C231
C230
R230
C262
C220
R234

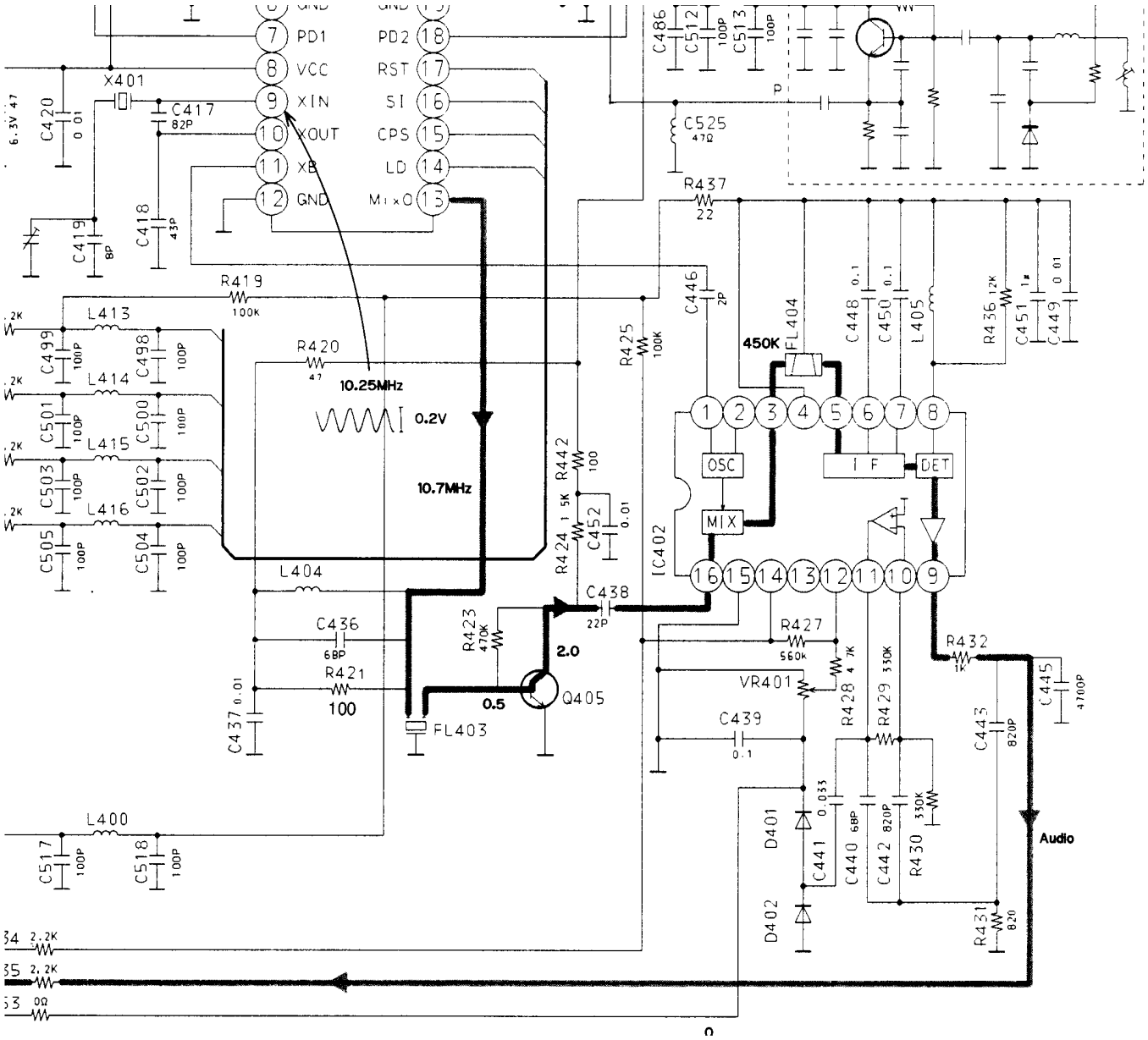
PD1
VCC
XIN
XOUT
XB
GND
PD2
RST
SI
CPS
LD
MixO
X401
C417 82P
C420 0.01
C419 8P
C418 43P
R419 100K
R420 47
10.25MHz
0.2V
10.7MHz
L413
L414
L415
L416
C499 100P
C498 100P
C501 100P
C500 100P
C503 100P
C502 100P
C505 100P
C504 100P
L404
C436 68P
R421 100
C437 0.01
FL403
R423 470K
2.0
0.5
Q405
R442 100
R424 1.5K
C452 0.01
C438 22P
IC402
OSC
MIX
I F
DET
450K
FL404
R425 100K
C446 2P
C486
C512 100P
C513 100P
C525 47Ω
R437 22
C448 0.1
C450 0.1
L405
R436 12K
C451 1μ
C449 0.01
R427 560K
R428 4.7K
VR401
R429 330K
R432 1K
C445 4700P
C443 820P
C439 0.1
D401
D402
C441 0.033
C440 68P
C442 820P
R430 330K
R431 820
Audio
L400
C517 100P
C518 100P
2.2K
2.2K
0Ω

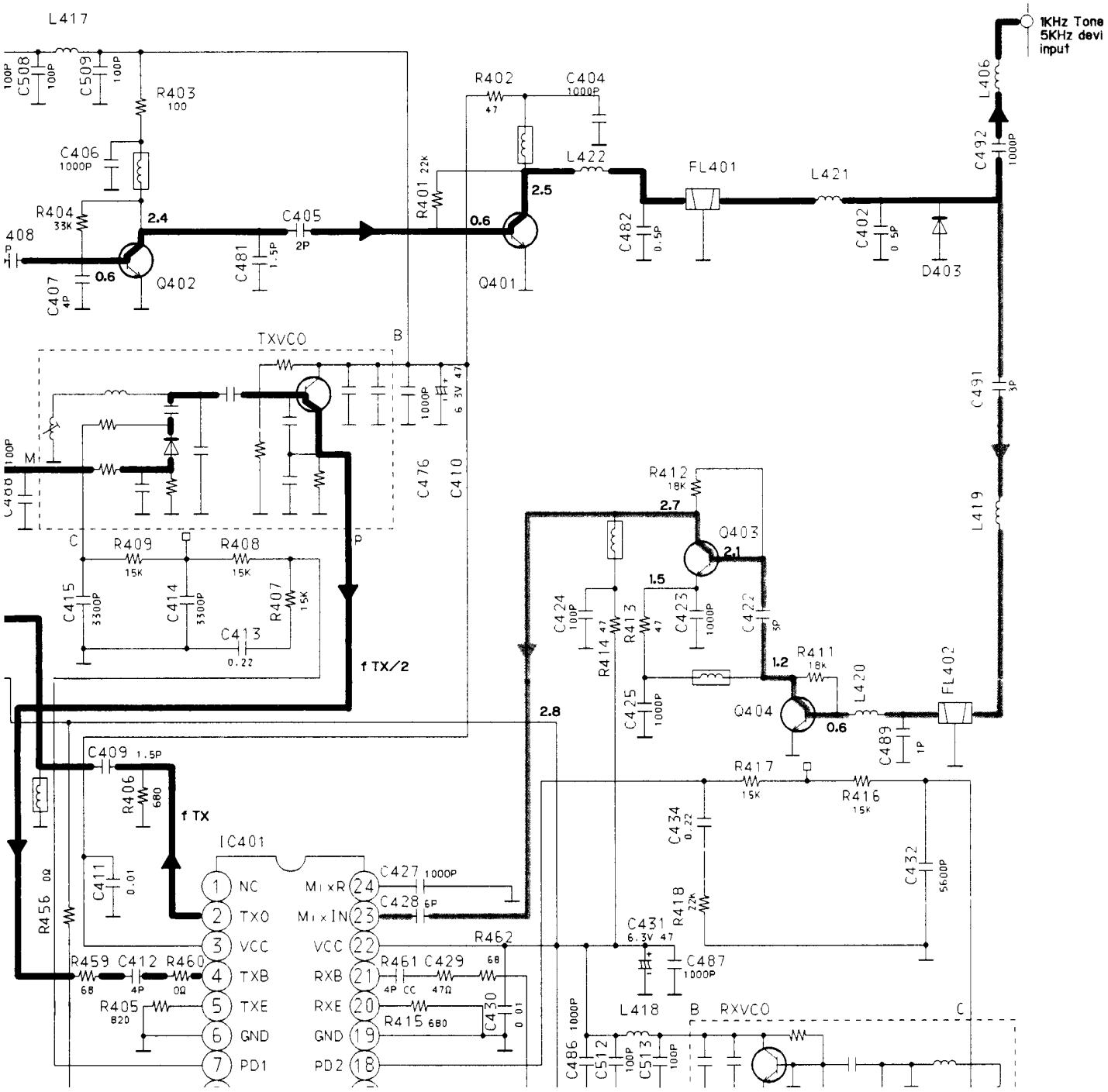
L417
C508 100P
C509 100P
R403 100
C406 1000P
R404 33K
2.4
C405 2P
R401 22K
0.6
R402 47
C404 1000P
L422
2.5
FL401
L421
C492 1000P
L406
1KHz Tone
5KHz devi
input
C482 0.5P
C402 0.5P
D403
C481 1.5P
Q402
Q401
C407 4P
TXVCO
B
C476
C410
C491 3P
L419
R412 18K
2.7
Q403
2.1
1.5
R409 15K
R408 15K
C415 3300P
C414 3300P
R407 15K
C413 0.22
f TX/2
C424 100P
R414 47
R413 47
C423 1000P
C422 5P
R411 18K
1.2
L420
FL402
C425 1000P
Q404
0.6
C489 1P
2.8
C409 1.5P
R406 680
f TX
R417 15K
R416 15K
C434 0.22
C432 5600P
IC401
C411 0.01
R456 0Ω
1 NC
2 TXO
3 VCC
4 TXB
5 TXE
6 GND
7 PD1
MixR 24
MixIN 23
VCC 22
RXB 21
RXE 20
GND 19
PD2 18
C427 1000P
C428 6P
R418 22K
C431 6.3V 47
C487 1000P
R462
R459 68
C412 4P
R460 0Ω
R461 4P
C429 CC 47Ω
68
R405 820
R415 680
C430 0.01
L418
B RXVCO C
C486 1000P
C512 100P
C513 100P

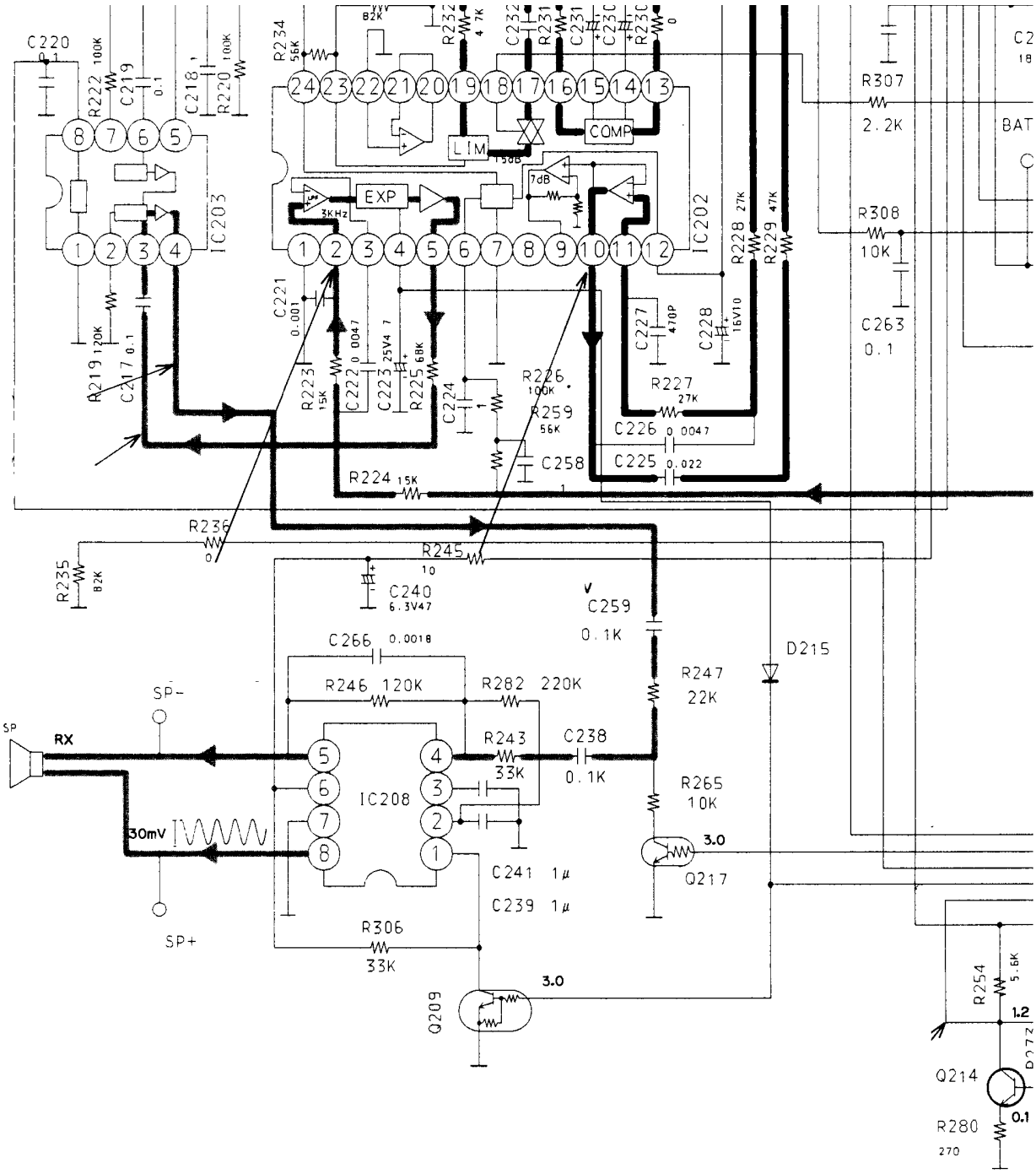
C220
R222 100K
C219
C218
R220 100K
R234 56K
R232 4.7K
C232
R231
C231
C230
R230
IC203
IC202
LIM
COMP
EXP
7dB
3KHz
R307
2.2K
BAT
R308
10K
C263
0.1
R228 27K
R229 47K
C221 0.001
C222 0.0047
C223 25V4.7
R225 68K
R223 15K
R219 120K
C217 0.1
C224 1
R226 100K
R259 56K
C258
C227 470P
C228 16V10
R227 27K
C226 0.0047
C225 0.022
R224 15K
R236 0
R245 10
R235 82K
C240 6.3V47
C259 0.1K
C266 0.0018
R246 120K
R282 220K
R247 22K
D215
SP-
SP
RX
R243 33K
C238 0.1K
IC208
R265 10K
30mV
3.0
Q217
C241 1μ
C239 1μ
SP+
R306 33K
Q209
R254 5.6K
1.2
Q214
R280 270
0.1

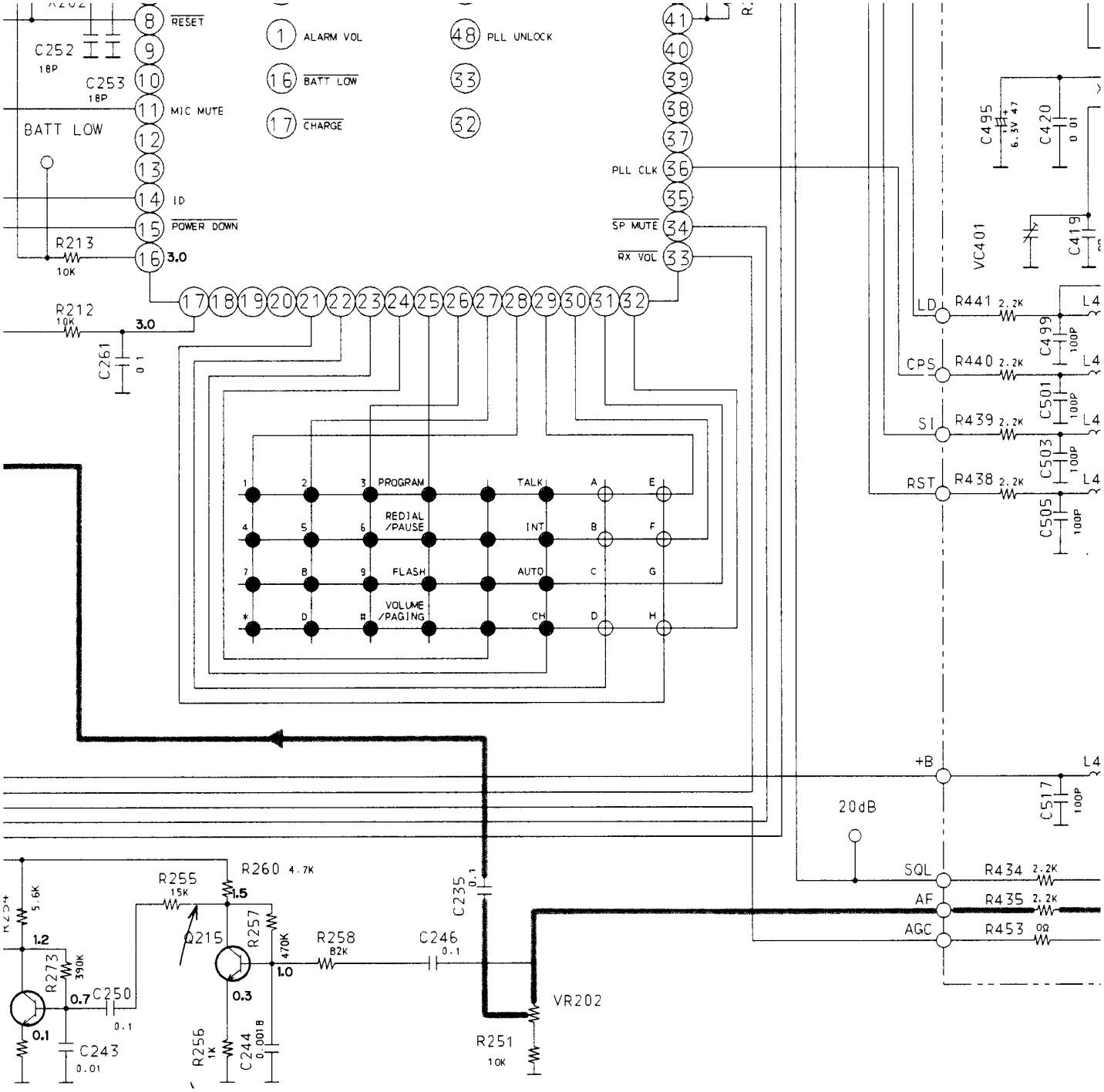
RESET
ALARM VOL
PLL UNLOCK
C252
18P
C253
18P
BATT LOW
MIC MUTE
BATT LOW
ID
POWER DOWN
R213
10K
3.0
PLL CLK
SP MUTE
RX VOL
R212
10K
3.0
C261
0.1
PROGRAM
TALK
REDIAL
/PAUSE
INT
FLASH
AUTO
VOLUME
/PAGING
CH
C495
6.3V 47
C420
0.01
VC401
C419
LD
R441 2.2K
CPS
R440 2.2K
SI
R439 2.2K
RST
R438 2.2K
C499
100P
C501
100P
C503
100P
C505
100P
+B
C517
100P
20dB
SQL
R434 2.2K
AF
R435 2.2K
AGC
R453 0Ω
R255
15K
R260 4.7K
1.5
Q215
R257
470K
1.0
0.3
R258
82K
C246
0.1
C235
0.1
VR202
R251
10K
R273
390K
0.7
C250
0.1
0.1
C243
0.01
R256
1K
C244
0.0018
5.6K
1.2

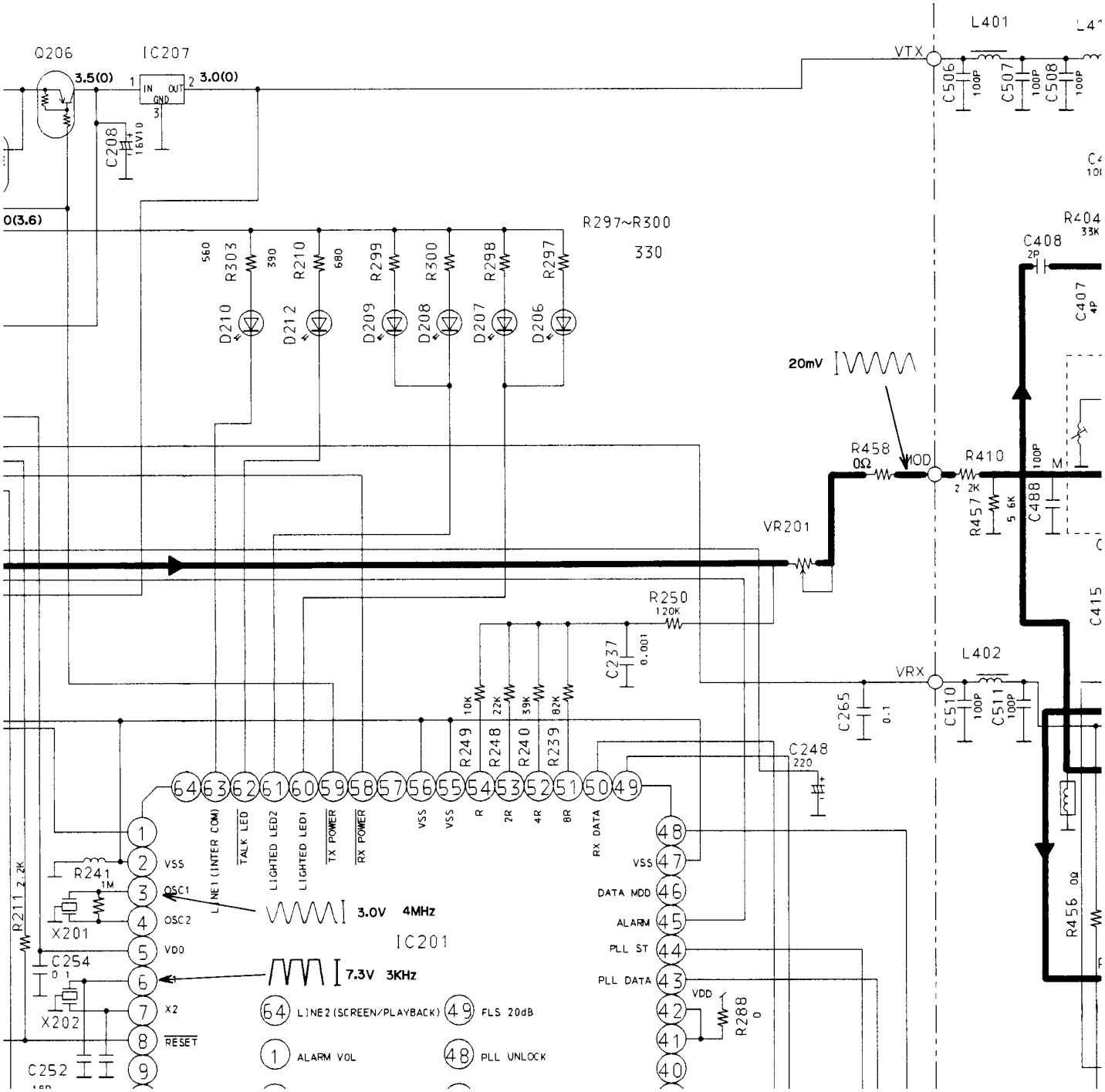
Q206
IC207
3.5(0)
3.0(0)
IN
OUT
GND
C208
16V10
0(3.6)
R297~R300
330
R303
R210
R299
R300
R298
R297
D210
D212
D209
D208
D207
D206
L401
VTX
C506
C507
C508
100P
C408
2P
R404
33K
C407
4P
20mV
R458
0Ω
MOD
R410
2.2K
R457
5.6K
C488
100P
VR201
R250
120K
C237
0.001
L402
VRX
C265
0.1
C510
C511
C248
220
R249
R248
R240
R239
10K
22K
39K
82K
LINE1 (INTER COM)
TALK LED
LIGHTED LED2
LIGHTED LED1
TX POWER
RX POWER
VSS
R
2R
4R
8R
RX DATA
R241
1M
X201
C254
0.1
X202
C252
R211
2.2K
OSC1
OSC2
VDD
X2
RESET
3.0V 4MHz
IC201
7.3V 3KHz
DATA MOD
ALARM
PLL ST
PLL DATA
VDD
R288
0
LINE2 (SCREEN/PLAYBACK)
FLS 20dB
ALARM VOL
PLL UNLOCK
R456
0Ω